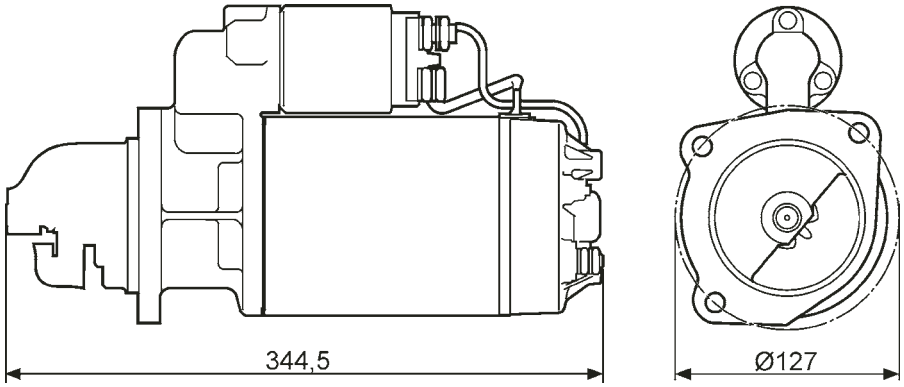


**Electrical starter**

Technical data:

| | |
|---|---|
| Make | Bosch |
| Power | 24VDC |
| Output | 4kW |